Stone Duality for Separation Logic

Part 1: A Stone Duality Primer

Simon Docherty

University College London

Thursday 8th June 2017

Outline

What Is Duality?

Outline

What Is Duality?

Algebra, Logic and Topology

Outline

What Is Duality?

Algebra, Logic and Topology

Stone Duality

Outline

What Is Duality?

Algebra, Logic and Topology

Stone Duality

Duality in Logic and Computer Science

What Is Duality?

A Really Informal Description of Duality

An Slightly Less Informal Description of Duality

Duality relates two types of mathematical structure in a strong way.

1. Every structure of type A can be systematically transformed into a structure of type B (and vice versa).

An Slightly Less Informal Description of Duality

Duality relates two types of mathematical structure in a strong way.

1. Every structure of type A can be systematically transformed into a structure of type B (and vice versa).
2. Every structure preserving map of type A can be systematically transformed into a structure preserving map of type B in the other direction.

An Slightly Less Informal Description of Duality

Duality relates two types of mathematical structure in a strong way.

1. Every structure of type A can be systematically transformed into a structure of type B (and vice versa).
2. Every structure preserving map of type A can be systematically transformed into a structure preserving map of type B in the other direction.
3. These transformations are (essentially) inverse to each other.

A Formal Definition of Duality

A **dual equivalence of categories** is

- a pair of functors $F : \mathcal{C} \to \mathcal{D}^{op}$ and $G : \mathcal{D}^{op} \to \mathcal{C}$

A Formal Definition of Duality

A **dual equivalence of categories** is

- a pair of functors $F : \mathcal{C} \to \mathcal{D}^{op}$ and $G : \mathcal{D}^{op} \to \mathcal{C}$
- together with natural transformations $\epsilon : Id_{D^{op}} \to FG$ and $\eta : \mathrm{Id}_C \to GF$

A Formal Definition of Duality

A **dual equivalence of categories** is

- a pair of functors $F : \mathcal{C} \to \mathcal{D}^{op}$ and $G : \mathcal{D}^{op} \to \mathcal{C}$
- together with natural transformations $\epsilon : Id_{D^{op}} \to FG$ and $\eta : \mathrm{Id}_C \to GF$
- such that every component $\epsilon_D : D \to FG(D)$, $\eta_C : C \to GF(C)$ is an isomorphism.

Algebra, Logic and Topology

Classical Propositional Logic

Syntax

Formulas generated by grammar

$p \mid \top \mid \bot \mid \varphi \vee \varphi \mid \varphi \wedge \varphi \mid \neg\varphi \mid \varphi \to \varphi$

Expressions $\varphi \vdash \psi$ derived by rules

$$\frac{\eta \vdash \phi \quad \eta \vdash \psi}{\eta \vdash \phi \wedge \psi}$$

$$\frac{\eta \wedge \phi \vdash \psi}{\eta \vdash \phi \to \psi}$$

$$\frac{\eta \vdash \phi \to \psi \quad \eta \vdash \phi}{\eta \vdash \psi}$$

Classical Propositional Logic

Syntax

Formulas generated by grammar
$p \mid \top \mid \bot \mid \varphi \vee \varphi \mid \varphi \wedge \varphi \mid \neg\varphi \mid \varphi \to \varphi$

Expressions $\varphi \vdash \psi$ derived by rules

$$\frac{\eta \vdash \phi \quad \eta \vdash \psi}{\eta \vdash \phi \wedge \psi}$$

$$\frac{\eta \wedge \phi \vdash \psi}{\eta \vdash \phi \to \psi}$$

$$\frac{\eta \vdash \phi \to \psi \quad \eta \vdash \phi}{\eta \vdash \psi}$$

Semantics

A **valuation** $v : \mathrm{Prop} \to \{0, 1\}$ assigns truth values to each propositional variable.

Classical Propositional Logic

Syntax

Formulas generated by grammar
$p \mid \top \mid \bot \mid \varphi \vee \varphi \mid \varphi \wedge \varphi \mid \neg\varphi \mid \varphi \to \varphi$

Expressions $\varphi \vdash \psi$ derived by rules

$$\frac{\eta \vdash \phi \quad \eta \vdash \psi}{\eta \vdash \phi \wedge \psi}$$

$$\frac{\eta \wedge \phi \vdash \psi}{\eta \vdash \phi \to \psi}$$

$$\frac{\eta \vdash \phi \to \psi \quad \eta \vdash \phi}{\eta \vdash \psi}$$

Semantics

A **valuation** $v : \mathrm{Prop} \to \{0, 1\}$ assigns truth values to each propositional variable.

v extends to $\hat{v} : \mathrm{Form} \to \{0, 1\}$:

$\hat{v}(p) = v(p) \quad \hat{v}(\top) = 1 \quad \hat{v}(\bot) = 0$

$\hat{v}(\varphi \vee \psi) = max(\hat{v}(\varphi), \hat{v}(\psi))$

$\hat{v}(\varphi \wedge \psi) = min(\hat{v}(\varphi), \hat{v}(\psi))$

$\hat{v}(\neg\varphi) = 1 - \hat{v}(\varphi)$

$\hat{v}(\varphi \to \psi) = max(1 - \hat{v}(\varphi), \hat{v}(\psi))$

Classical Propositional Logic

Syntax

Formulas generated by grammar
$p \mid \top \mid \bot \mid \varphi \vee \varphi \mid \varphi \wedge \varphi \mid \neg\varphi \mid \varphi \to \varphi$

Expressions $\varphi \vdash \psi$ derived by rules

$$\frac{\eta \vdash \phi \quad \eta \vdash \psi}{\eta \vdash \phi \wedge \psi}$$

$$\frac{\eta \wedge \phi \vdash \psi}{\eta \vdash \phi \to \psi}$$

$$\frac{\eta \vdash \phi \to \psi \quad \eta \vdash \phi}{\eta \vdash \psi}$$

Semantics

A **valuation** $v : \mathrm{Prop} \to \{0, 1\}$ assigns truth values to each propositional variable.

v extends to $\hat{v} : \mathrm{Form} \to \{0, 1\}$:

$\hat{v}(p) = v(p) \quad \hat{v}(\top) = 1 \quad \hat{v}(\bot) = 0$

$\hat{v}(\varphi \vee \psi) = max(\hat{v}(\varphi), \hat{v}(\psi))$

$\hat{v}(\varphi \wedge \psi) = min(\hat{v}(\varphi), \hat{v}(\psi))$

$\hat{v}(\neg\varphi) = 1 - \hat{v}(\varphi)$

$\hat{v}(\varphi \to \psi) = max(1 - \hat{v}(\varphi), \hat{v}(\psi))$

$\varphi \vDash \psi$ if every v satisfying φ satisfies ψ.

Algebraizing Classical Propositional Logic

- Define $\varphi \equiv \psi$ iff $\varphi \vdash \psi$ and $\psi \vdash \varphi$ provable.
- $[\varphi] = \{\psi \mid \varphi \equiv \psi\}$
- $\mathbb{A}_{\mathrm{Form}} = \{[\varphi] \mid \varphi \in \mathrm{Form}\}$.
- $\mathbb{A}_{\mathrm{Form}}$ has the structure of a **Boolean algebra** when $\vee, \wedge, \neg$ interpreted as join, meet and negation.
- If $\varphi \vdash \psi$ not provable, then $[\varphi \to \psi] < \top$ in $\mathbb{A}_{\mathrm{Form}}$

Ultrafilters

A **filter** on a Boolean algebra $\mathbb{A}$ is a subset $F \subseteq \mathbb{A}$ satisfying the following properties

1. $\perp \notin F$;
2. $x, y \in F$ implies $x \wedge y \in F$;
3. $x \in F$ and $x \leq y$ implies $y \in F$.

Ultrafilters

A **filter** on a Boolean algebra $\mathbb{A}$ is a subset $F \subseteq \mathbb{A}$ satisfying the following properties

1. $\bot \notin F$;
2. $x, y \in F$ implies $x \wedge y \in F$;
3. $x \in F$ and $x \leq y$ implies $y \in F$.

An **ultrafilter** additionally satisfies

4. $x \vee y \in F$ implies $x \in F$ or $y \in F$.

Ultrafilters

A **filter** on a Boolean algebra $\mathbb{A}$ is a subset $F \subseteq \mathbb{A}$ satisfying the following properties

1. $\bot \notin F$;
2. $x, y \in F$ implies $x \wedge y \in F$;
3. $x \in F$ and $x \leq y$ implies $y \in F$.

An **ultrafilter** additionally satisfies

4. $x \vee y \in F$ implies $x \in F$ or $y \in F$.

Theorem

On a Boolean algebra $\mathbb{A}$, a filter F is an ultrafilter iff F is maximal wrt $\subseteq$ iff for all $a \in \mathbb{A}$, $a \in F$ or $\neg a \in F$.

Another Perspective on Ultrafilters

- For any Boolean algebra $\mathbb{A}$, ultrafilters are in bijective correspondence with homomorphisms $f : \mathbb{A} \to \{0, 1\}$.
- Every homomorphism $f : \mathbb{A}_{\mathrm{Form}} \to \{0, 1\}$ uniquely corresponds to a valuation $v : \mathrm{Prop} \to \{0, 1\}$ with $f = \hat{v}$.
- Ultrafilters on the formula algebra $\mathbb{A}_{\mathrm{Form}}$ are in bijective correspondence with valuations.

Stone's Representation Theorem

Theorem (Stone 1936)

[1] *Every Boolean algebra is isomorphic to a Boolean algebra of sets.*

Proof.

- Let $\mathbb{A}$ be a Boolean algebra and $Uf(\mathbb{A})$ its set of ultrafilters.
- Consider the power set algebra $(\mathcal{P}(Uf(\mathbb{A})), \cap, \cup, \setminus, Uf(\mathbb{A}), \emptyset)$.
- The map $h : \mathbb{A} \to \mathcal{P}(Uf(\mathbb{A}))$, defined

$$h(a) = \{F \in Uf(\mathbb{A}) \mid a \in F\},$$

is an embedding.

□

[1] M.H. Stone. The Theory of Representations of Boolean Algebras. Transactions of the American Mathematical Society 40: 37 – 111. 1936

From Representation, Completeness

Theorem (Completeness Theorem for Propositional Logic)

$\varphi \vDash \psi$ implies $\varphi \vdash \psi$.

Proof.

- The representation theorem gives us an embedding $h : \mathbb{A}_{\mathrm{Form}} \to \mathcal{P}(\mathrm{Val})$ where $\mathbb{A}_{\mathrm{Form}}$ is the set of all valuations and $h(\varphi) = \{v \mid \hat{v}(\varphi) = 1\}$.

From Representation, Completeness

Theorem (Completeness Theorem for Propositional Logic)

$\varphi \vDash \psi$ implies $\varphi \vdash \psi$.

Proof.

- The representation theorem gives us an embedding $h : \mathbb{A}_{\mathrm{Form}} \to \mathcal{P}(\mathrm{Val})$ where $\mathbb{A}_{\mathrm{Form}}$ is the set of all valuations and $h(\varphi) = \{v \mid \hat{v}(\varphi) = 1\}$.
- Suppose $\varphi \vdash \psi$ not provable. Then $\varphi \to \psi < \top$ in $\mathbb{A}_{\mathrm{Form}}$. Hence $h(\varphi \to \psi) \subsetneq \mathrm{Val}$.

From Representation, Completeness

Theorem (Completeness Theorem for Propositional Logic)

$\varphi \vDash \psi$ implies $\varphi \vdash \psi$.

Proof.

- The representation theorem gives us an embedding $h : \mathbb{A}_{\mathrm{Form}} \to \mathcal{P}(\mathrm{Val})$ where $\mathbb{A}_{\mathrm{Form}}$ is the set of all valuations and $h(\varphi) = \{v \mid \hat{v}(\varphi) = 1\}$.
- Suppose $\varphi \vdash \psi$ not provable. Then $\varphi \to \psi < \top$ in $\mathbb{A}_{\mathrm{Form}}$. Hence $h(\varphi \to \psi) \subsetneq \mathrm{Val}$.
- Thus there exists a valuation v such that $\hat{v}(\varphi \to \psi) = 0$.

From Representation, Completeness

Theorem (Completeness Theorem for Propositional Logic)

$\varphi \vDash \psi$ implies $\varphi \vdash \psi$.

Proof.

- The representation theorem gives us an embedding $h : \mathbb{A}_{\mathrm{Form}} \to \mathcal{P}(\mathrm{Val})$ where $\mathbb{A}_{\mathrm{Form}}$ is the set of all valuations and $h(\varphi) = \{v \mid \hat{v}(\varphi) = 1\}$.
- Suppose $\varphi \vdash \psi$ not provable. Then $\varphi \to \psi < \top$ in $\mathbb{A}_{\mathrm{Form}}$. Hence $h(\varphi \to \psi) \subsetneq \mathrm{Val}$.
- Thus there exists a valuation v such that $\hat{v}(\varphi \to \psi) = 0$.
- Hence $\hat{v}(\varphi) = 1$ and $\hat{v}(\psi) = 0$. So $\varphi \vDash \psi$ does not hold.

$\square$

What about semantics?

We've generalized the **syntax** of propositional logic to obtain a category of algebras; can we similarly generalize the **semantics**?

What about semantics?

We've generalized the **syntax** of propositional logic to obtain a category of algebras; can we similarly generalize the **semantics**?

"A cardinal principle of modern mathematical research may be stated as a maxim: 'One must always topologize'" - Marshall H. Stone.

Topologizing Classical Propositional Logic

A **topological space** is a pair $(X, \mathcal{O})$ s.t. X is a set and $\mathcal{O} \subseteq \mathcal{P}(X)$ such that

- $\emptyset, X \in \mathcal{O}$,
- $\mathcal{O}$ closed under finite intersections,
- $\mathcal{O}$ closed under arbitrary unions.

Topologizing Classical Propositional Logic

A **topological space** is a pair $(X, \mathcal{O})$ s.t. X is a set and $\mathcal{O} \subseteq \mathcal{P}(X)$ such that

- $\emptyset, X \in \mathcal{O}$,
- $\mathcal{O}$ closed under finite intersections,
- $\mathcal{O}$ closed under arbitrary unions.

For a $A \subseteq X$, A is...

- **Open** if $A \in \mathcal{O}$
- **Closed** if $X \setminus A \in \mathcal{O}$
- **Clopen** if both open and closed.

Topologizing Classical Propositional Logic

A **topological space** is a pair $(X, \mathcal{O})$ s.t. X is a set and $\mathcal{O} \subseteq \mathcal{P}(X)$ such that

- $\emptyset, X \in \mathcal{O}$,
- $\mathcal{O}$ closed under finite intersections,
- $\mathcal{O}$ closed under arbitrary unions.

For a $A \subseteq X$, A is...

- **Open** if $A \in \mathcal{O}$
- **Closed** if $X \setminus A \in \mathcal{O}$
- **Clopen** if both open and closed.

Define $h_\varphi = \{v \in \mathrm{Val} \mid \hat{v}(\varphi) = 1\}$. The set $\mathcal{B} = \{h_\varphi \mid \varphi \in \mathcal{L}\}$ generates a topology on the set of valuations. We call this the **Valuation Space**.

Properties of the Valuation Space

A topological space is...

- **compact** iff for every set of closed sets $\{C_i \mid i \in I\}$, if every finite subset has non-empty intersection then $\bigcap_i \{C_i \mid i \in I\} \neq \emptyset$.
- **Hausdorff** iff every pair of distinct points is separated by disjoint open sets.
- **zero-dimensional** iff it is generated by clopen sets.
- a **Stone space** if it is **compact**, **Hausdorff** and **zero-dimensional**.

Theorem

The valuation space is a Stone space.

Compactness begets Compactness

Theorem (Compactness Theorem)

Given a (possibly infinite) set of propositional formulas Σ, Σ is satisfiable iff every finite subset of Σ is satisfiable.

Compactness begets Compactness

Theorem (Compactness Theorem)

Given a (possibly infinite) set of propositional formulas Σ, Σ is satisfiable iff every finite subset of Σ is satisfiable.

Proof.

- Let Σ be finitely satisfiable. Define $\mathcal{C} = \{h_\varphi \mid \varphi \in \Sigma\}$: each member is a clopen, thus closed, set.

Compactness begets Compactness

Theorem (Compactness Theorem)

Given a (possibly infinite) set of propositional formulas Σ, Σ is satisfiable iff every finite subset of Σ is satisfiable.

Proof.

- Let Σ be finitely satisfiable. Define $\mathcal{C} = \{h_\varphi \mid \varphi \in \Sigma\}$: each member is a clopen, thus closed, set.
- Given $\varphi_1, \ldots, \varphi_n \in \Sigma$, by finite satisfiability there exists v satisfying $\varphi_1, \ldots, \varphi_n$ so $v \in \bigcap_i^n h_{\varphi_i}$.

Compactness begets Compactness

Theorem (Compactness Theorem)

Given a (possibly infinite) set of propositional formulas Σ, Σ is satisfiable iff every finite subset of Σ is satisfiable.

Proof.

- Let Σ be finitely satisfiable. Define $\mathcal{C} = \{h_\varphi \mid \varphi \in \Sigma\}$: each member is a clopen, thus closed, set.
- Given $\varphi_1, \ldots, \varphi_n \in \Sigma$, by finite satisfiability there exists v satisfying $\varphi_1, \ldots, \varphi_n$ so $v \in \bigcap_i^n h_{\varphi_i}$.
- Hence by topological compactness there exists $v' \in \bigcap \mathcal{C}$, thus v' satisfies Σ.

$\square$

Connecting The Perspectives

- Boolean algebras are an abstraction of the **syntax** of classical propositional logic.
- Similarly, Stone spaces are an abstraction of the **semantics** of classical propositional logic.
- Syntax and semantics are connected by **soundness and completeness theorems**.
- ***Stone duality*** *is the generalization of soundness and completeness to the level of Boolean algebras and Stone spaces*.

Stone Duality

Recap

- Formulas quotiented by logical equivalence give Boolean algebra $\mathbb{A}_{\mathrm{Form}}$.
- Representation Theorem: $h : \mathbb{A} \to \mathcal{P}(Uf(\mathbb{A}))$ gives an embedding where $h(a) = \{F \mid a \in F\}$.
- $h_\varphi = \{v \mid \hat{v}(\varphi) = 1\}$ generates Stone topology on set of valuations.
- $h(\varphi) = h_\varphi$ when $\mathbb{A} = \mathbb{A}_{\mathrm{Form}}$.

The Stone Space of a Boolean Algebra

Theorem

Given a Boolean algebra $\mathbb{A}$, the set $Uf(\mathbb{A})$ topologised by $\{h(a) \mid a \in \mathbb{A}\}$ is a Stone space.

We denote the Stone dual of a Boolean algebra by $\mathcal{S}(\mathbb{A})$.

The Boolean Algebra of a Stone Space

Theorem

Given a Stone space $\mathcal{X}$, the set of clopen sets of $\mathcal{X}$ carries the structure of a Boolean algebra.

We denote the Boolean dual of a Stone space $\mathcal{X}$ by $\mathbb{A}(\mathcal{X})$.

Transforming Morphisms

Theorem

1. *If* $f : \mathbb{A} \to \mathbb{A}'$ *is a Boolean homomorphism, then*

$$f^{-1} : \mathcal{S}(\mathbb{A}') \to \mathcal{S}(\mathbb{A})$$

   is a continuous map of Stone spaces.

2. *If* $g : \mathcal{X} \to \mathcal{X}'$ *is a continuous map of Stone spaces, then*

$$g^{-1} : \mathcal{A}(\mathcal{X}') \to \mathcal{A}(\mathcal{X})$$

   is a Boolean homomorphism.

Note the change in direction of arrows!

Retreiving the Original Structures

Theorem

1. *For all Boolean algebras* $\mathbb{A}$*, the map*

$$a \mapsto \{F \in Uf(\mathbb{A}) \mid a \in F\}$$

   is an isomorphism between $\mathbb{A}$ *and* $\mathcal{AS}(\mathbb{A})$*.*

2. *For all Stone spaces* $\mathcal{X}$*, the map*

$$x \mapsto \{C \mid C \text{ clopen and } x \in C\}$$

   is an isomoprhism between $\mathcal{X}$ *and* $\mathcal{SA}(\mathcal{X})$*.*

Stone Duality

Theorem

The categories of Boolean algebras and Stone spaces are dually equivalent.

Duality in Logic and Computer Science

A Cornucopia of Logical Dualities

Stone duality has been generalized to a variety of logical settings.

Logic

Positive
Intuitionistic
Classical
Modal
Relevant
Many-valued
Quantum action
Nominal Classical
Hybrid
Modal μ-calculus
Markovan

A Cornucopia of Logical Dualities

Stone duality has been generalized to a variety of logical settings.

Logic	Algebra
Positive	Distributive lattice
Intuitionistic	Heyting algebra
Classical	Boolean algebra
Modal	BAO
Relevant	Relevant algebra
Many-valued	MV algebra
Quantum action	Piron lattice
Nominal Classical	BANoNa
Hybrid	Hybrid algebra
Modal μ-calculus	Modal μ-algebra
Markovan	Aumann algebra

A Cornucopia of Logical Dualities

Stone duality has been generalized to a variety of logical settings.

Logic	Algebra	Topological Space
Positive	Distributive lattice	Priestley space
Intuitionistic	Heyting algebra	Esakia space
Classical	Boolean algebra	Stone space
Modal	BAO	Descriptive frame
Relevant	Relevant algebra	Urquhart space
Many-valued	MV algebra	Tychonoff space
Quantum action	Piron lattice	Quantum dynamic frame
Nominal Classical	BANoNa	Nomimal Stone space
Hybrid	Hybrid algebra	2-Sort Desc. Frame
Modal μ-calculus	Modal μ-algebra	Modal μ-frame
Markovan	Aumann algebra	Markov process

Applications of Logical Dualities

Dualities can be used to prove serious results about logics.

Theorem

[2] *Every **Sahlqvist formula** of modal logic is **canonical** and corresponds to a **first-order frame condition**.*

Theorem

[3] ***Interpolation** fails in relevant logic.*

Proof Sketch.

In both cases: reduce problem to an algebraic or topological property and transfer along the dual equivalence. □

[2] G. Sambin and V. Vaccaro. A New Proof of Sahlqvist's Theorem on Modal Definability and Completeness. Journal of Symbolic Logic 54, 1989

[3] A. Urquhart. Failure of Interpolation in Relevant Logics. Journal of Philosophical Logic 22(5), 1993

Automata Theory

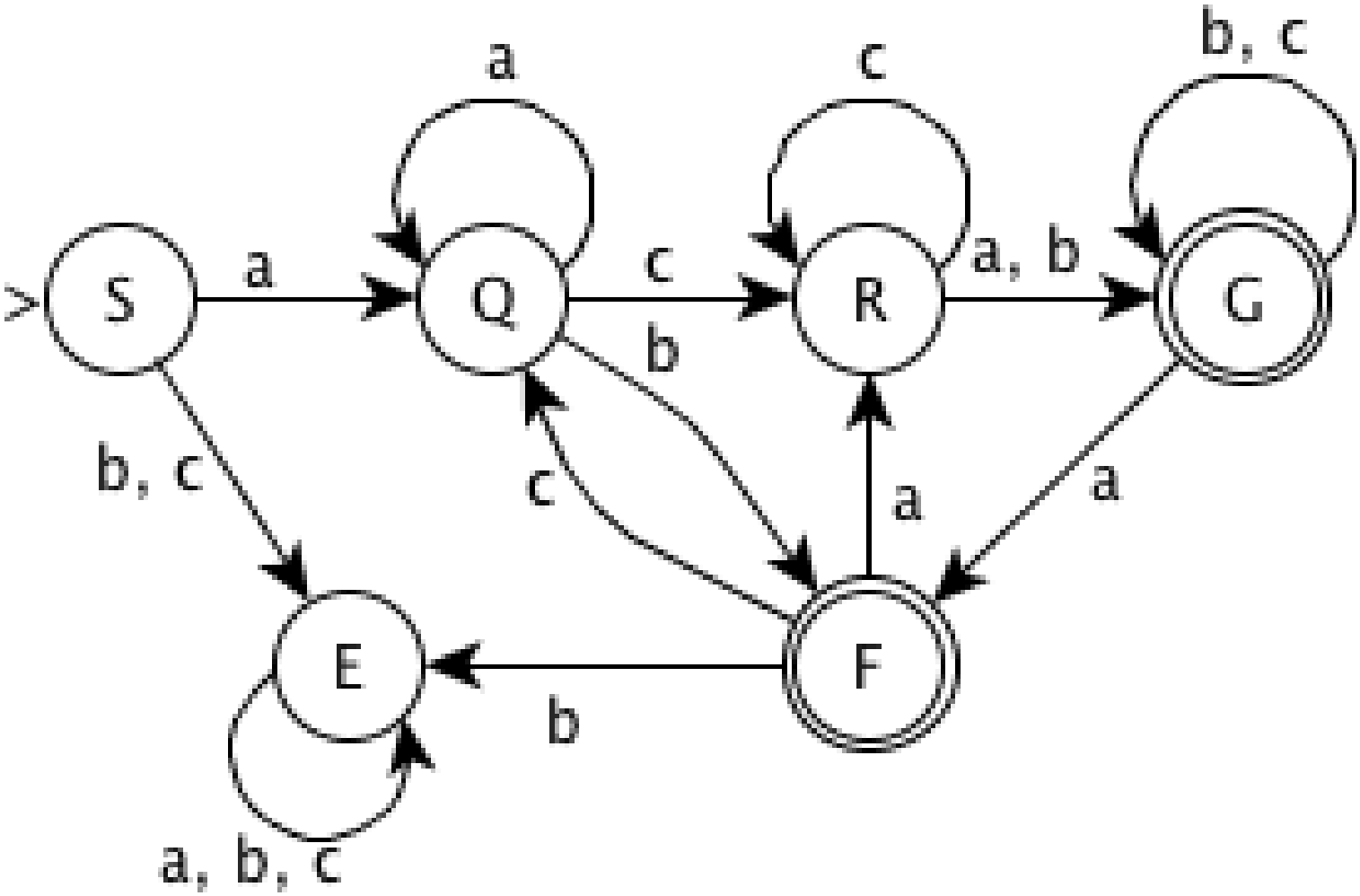

Coalgebra

- Coalgebra give a common mathematical framework for investigating state-based dynamics
- Ingredients: **state space** X and **transition structure** TX.
- A **coalgebra** is a map $\alpha : X \to TX$.
- Examples: automata, transition systems, Kripke frames, petri nets, etc.

Coalgebra

- Stone-type duality gives a machine to generate logics of coalgebraic structures[4]

$$\begin{tikzcd} \mathcal{C} \arrow[loop left, "L"] \arrow[r, bend left] \arrow[r, phantom, "\perp"] & \mathcal{D} \arrow[l, bend left] \arrow[loop right, "T"] \end{tikzcd}$$

[4] M. M. Bonsangue and A. Kurz. Duality for Logics of Transition Systems. FOSSACS 2005

Program Semantics

- Plotkin/Smyth[5]: Duality between state transformation semantics and predicate-transformer semantics.
- Kozen[6]: Duality between two kinds of probablistic program semantics.
- Abramsky[7]: Duality between domain theoretic semantics and operational semantics. Framework for outputting program logics.

[5] G.D. Plotkin. Dijkstra's predicate transformers and Smyth's powerdomains. Abstract Software Specifications, LNCS 86, 1980

[6] D. Kozen, A Probabilistic PDL, STOC '83, ACM, 1983

[7] S. Abramsky. Domain Theory in Logical Form. Annals of Pure and Applied Logic 51(1-2). 1991

The Moral of The Story

- Dualities are everywhere in computer science.
- Dualities provide a general framework for syntax, semantics, soundness and completeness in logic.
- Dualities provide new perspectives to prove things with.
- Dualities provide a mathematical foundation for established theory.
- Dualities facilitate the transfer of theory from one field to another.